dfocke@PLCCD102 - i_type_d_inlet.m - Monday December 13 1999 04:18:32 PM EST

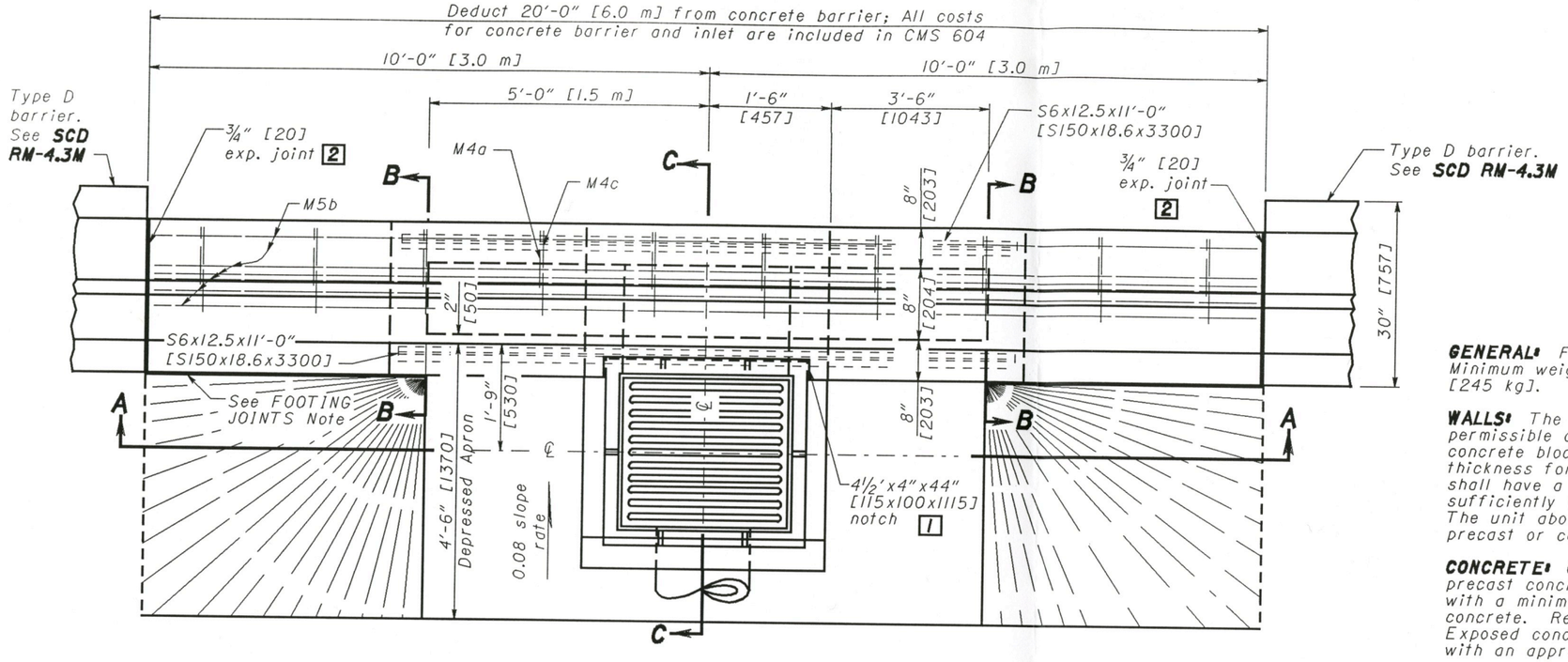

PLAN VIEW

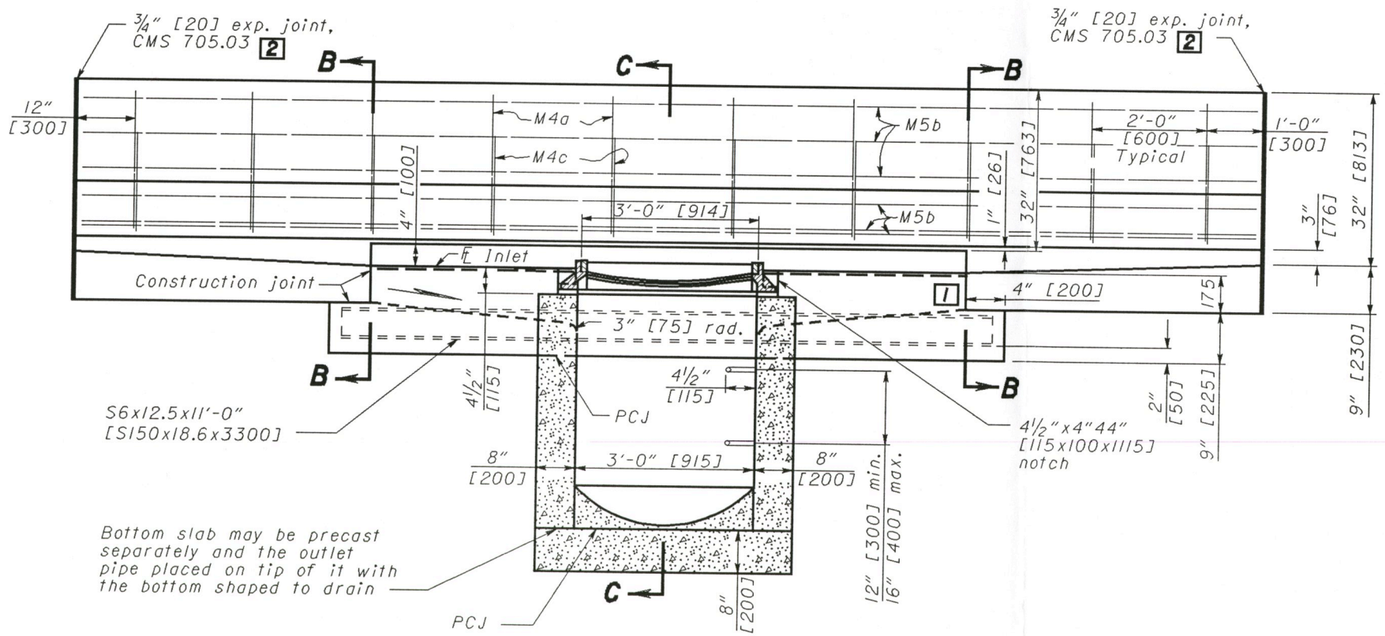

SECTION A-A

NOTES

GENERAL: For details of concrete barriers, see **SCD RM-4.3.** Minimum weight [mass] of frame and cover shall be 540 lbs. [245 kg].

WALLS: The walls between the bottom slab and the upper permissible construction joint may be built of brick, concrete concrete block or cast-in-place concrete, 8" [203] nominal thickness for depths of 12' [3.5 m] or less. Precast walls shall have a minimum thickness of 6" [150] and be reinforced sufficiently to permit shipping and handling without damage. The unit above the permissible construction joint may be precast or cast-in-place.

CONCRETE: Cast-in-place concrete is to be Class C. All precast concrete shall meet the requirements of CMS 706.13 with a minimum of 4% entrained air content in the hardened concrete. Required markings shall include the inlet number. Exposed concrete surfaces of the barrier shall be sealed with an approved sealer.

REINFORCING STEEL: Reinforcing steel shall be epoxy coated in accordance with CMS 509.10.

FOOTING JOINTS: The vertical walls between the barrier footing and a concrete pavement or concrete base shall be provided with a sealed joint as detailed on **SCD RM-4.3.**

STEPS: Steps shall be in accordance with **SCD MH-1.1.**

GRATE LOCATION: In superelevated curves or at other locations where there is unequal discharge from the directional roadways, the inlet grating shall be located in the roadway which discharges the major flow.

INLETS OVER 12 FEET [3.5 m] IN DEPTH: Such inlets shall be precast or cast-in-place concrete; reinforced with #4 [#13M] bars on 12" [300] centers both vertically and horizontally with 2" [50] clearance from the inside wall face.

OPENINGS: Pipe openings shall be the outside diameter of the pipe being supplied plus 2" [50] when fabricated or field cut. The interstitial space shall be filled with grout per CMS 601.

LEGEND

1 After casting is placed, fill notch with Class C concrete

2 A 1 1/2" [37] minimum exp. joint shall be provided in concrete pavement or concrete shoulders.

PCJ = Permissible construction joint

OHIO DEPARTMENT OF TRANSPORTATION

ADMINISTRATOR

(12-13-99)
DATE

REVISIONS

STDS. ENGR. M. EVANS

DRAWN D. FOCKE

All metric dimensions [in brackets] are in millimeters unless otherwise noted.

ROADWAY ENGINEERING SERVICES

STANDARD CONSTRUCTION DRAWING

CONCRETE BARRIER (TYPE D) INLET

NUMBER **(1-2.3)**

1 / 2

dfocke@PLCCD102 - i_type_d_inlet.m - Tuesday December 14 1999 08:06:33 AM EST

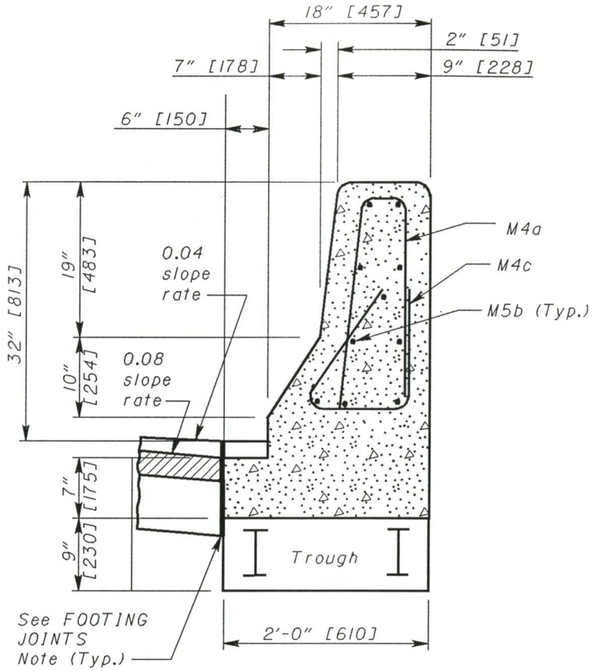

SECTION B-B

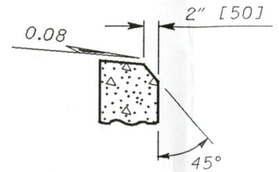

ALTERNATE SPILLWAY SHAPE

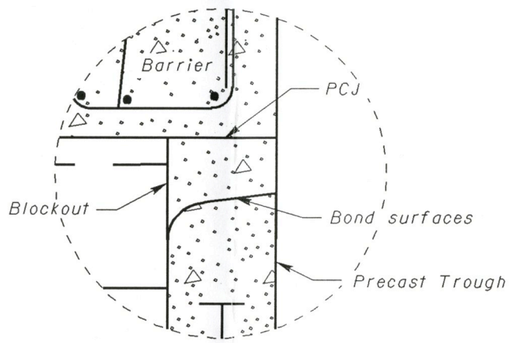

FORMED BLOCKOUT DETAIL

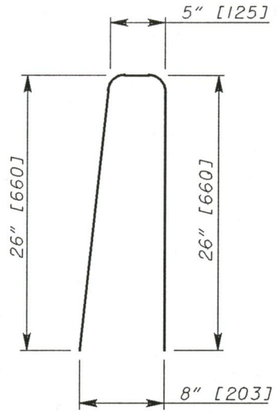

M4a

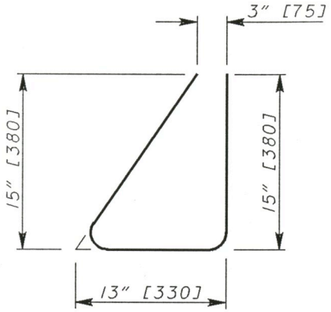

M4c

BENDING DIAGRAM #4 [#13M] BARS

STEEL LIST

INLET	M4a #4 [#13M]		M5b #5 [#16M]		M4c #4 [#13M]		S6x12.5 [S150x18.6]	
	No.	Length	No.	Length	No.	Length	No.	Length
Type D	10	4'-8" [1420]	10	19'-8" [5900]	10	3'-6" [1070]	2	11'-0" [3300]

Included for estimating purposes only. The cost of furnishing and placing all reinforcing steel shall be included in Item 604 for payment.

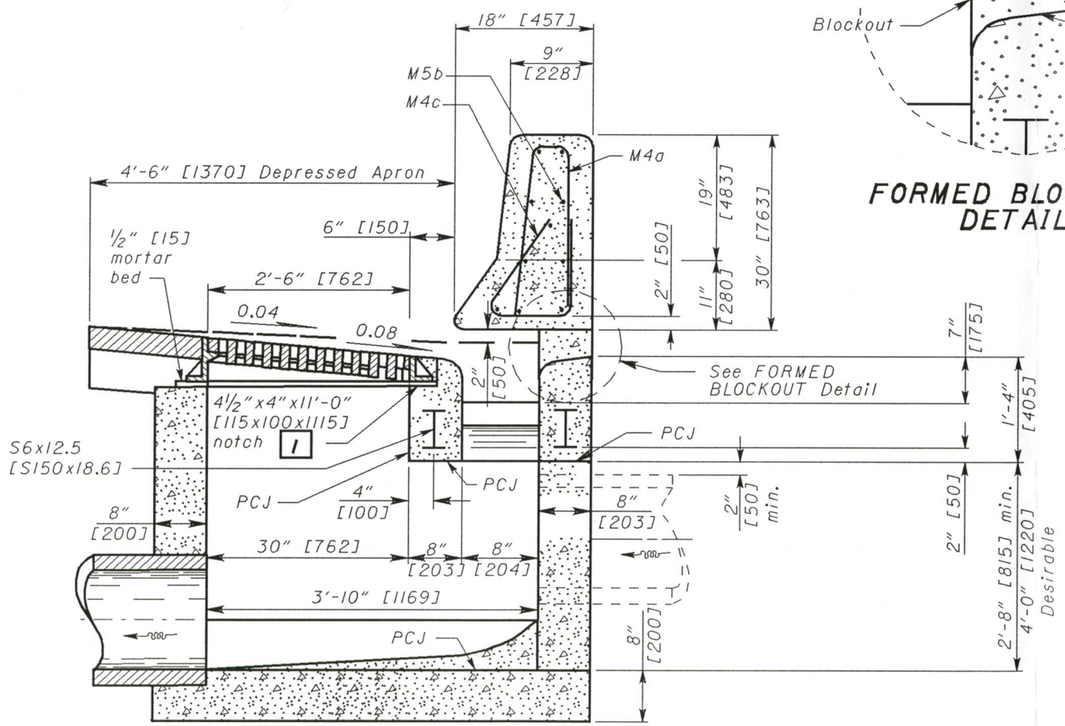

SECTION C-C

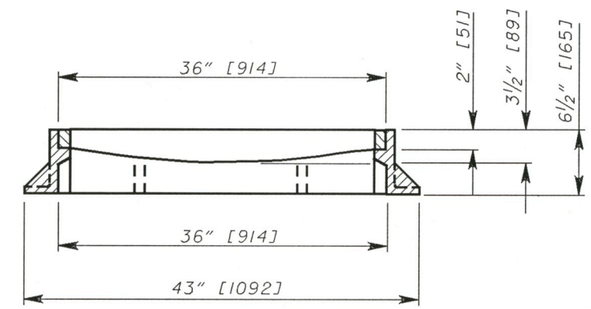

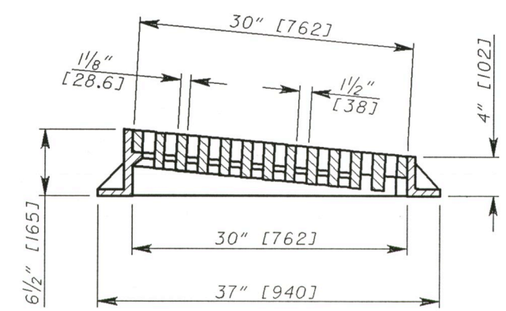

CASTING DETAILS

OHIO DEPARTMENT OF TRANSPORTATION

(12-13-99) DATE

ADMINISTRATOR

REVISIONS

STDS. ENGR. M. EVANS

DRAWN D. FOCKE

All metric dimensions (in brackets [ ]) are in millimeters unless otherwise noted.

ROADWAY ENGINEERING SERVICES

STANDARD CONSTRUCTION DRAWING

CONCRETE BARRIER (TYPE D) INLET

NUMBER (1-2.3)

2/2

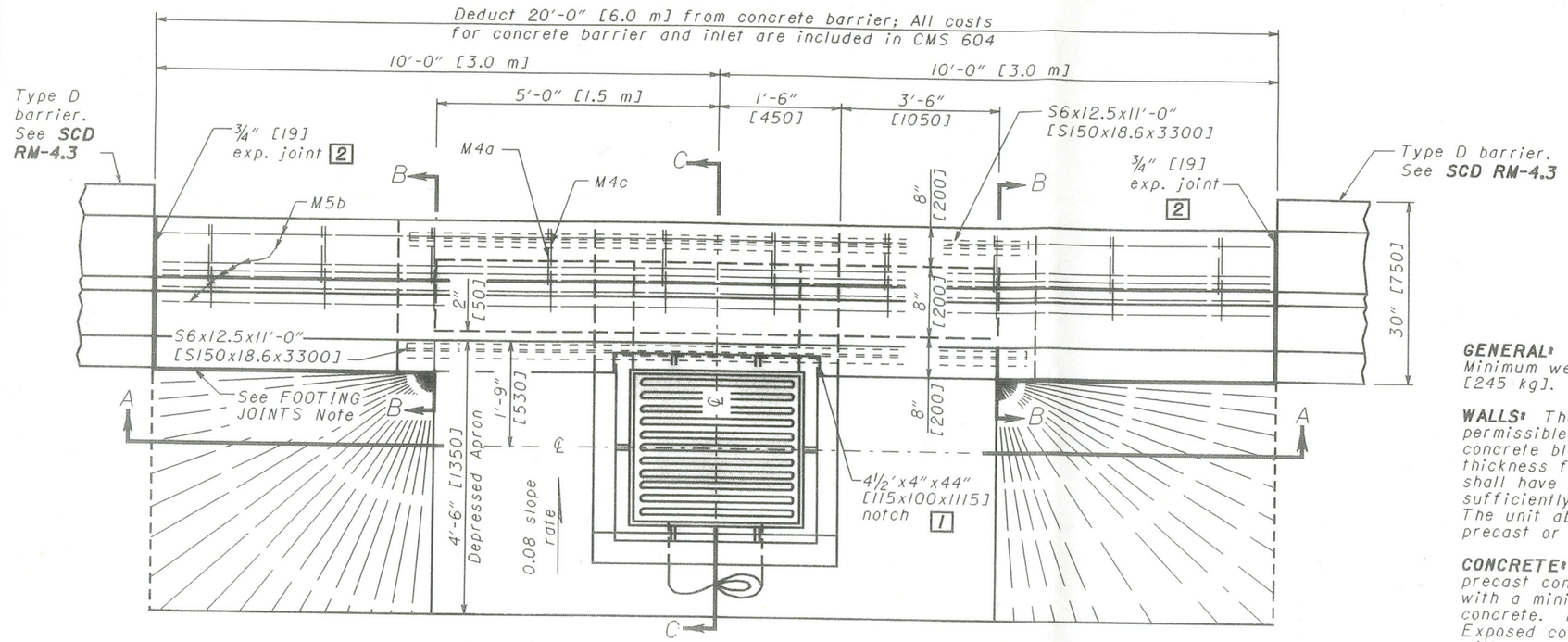

See Sht. 2/2 for Sections B-B & C-C

PLAN VIEW

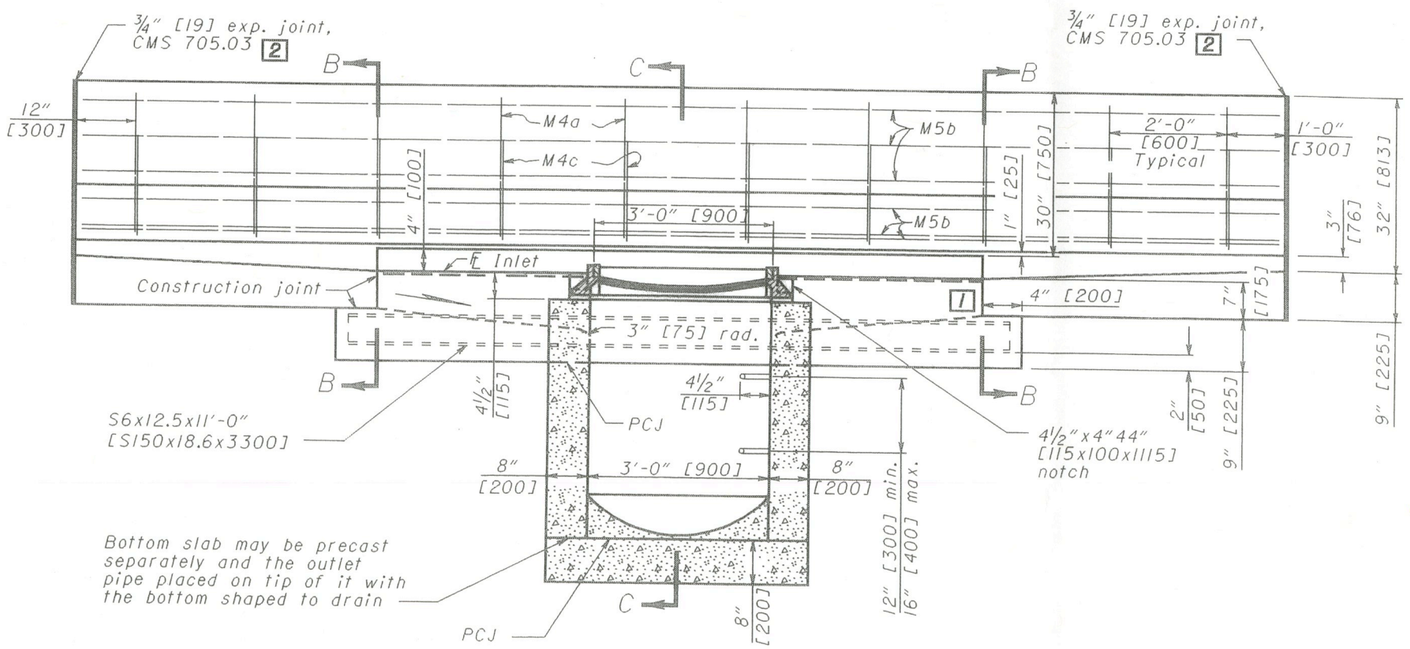

SECTION A-A

NOTES

GENERAL: For details of concrete barriers, see **SCD RM-4.3.** Minimum weight [mass] of frame and cover shall be 540 lbs. [245 kg].

WALLS: The walls between the bottom slab and the upper permissible construction joint may be built of brick, concrete concrete block or cast-in-place concrete, 8" [200] nominal thickness for depths of 12' [3.5 m] or less. Precast walls shall have a minimum thickness of 6" [150] and be reinforced sufficiently to permit shipping and handling without damage. The unit above the permissible construction joint may be precast or cast-in-place.

CONCRETE: Cast-in-place concrete is to be Class C. All precast concrete shall meet the requirements of CMS 706.13 with a minimum of 4% entrained air content in the hardened concrete. Required markings shall include the inlet number. Exposed concrete surfaces of the barrier shall be sealed with an approved sealer.

REINFORCING STEEL: Reinforcing steel shall be epoxy coated in accordance with CMS 509.10.

FOOTING JOINTS: The vertical walls between the barrier footing and a concrete pavement or concrete base shall be provided with a sealed joint as detailed on **SCD RM-4.3.**

STEPS: Steps shall be in accordance with **SCD MH-1.1.**

GRATE LOCATION: In superelevated curves or at other locations where there is unequal discharge from the directional roadways, the inlet grating shall be located in the roadway which discharges the major flow.

INLETS OVER 12 FEET [3.5 m] IN DEPTH: Such inlets shall be precast or cast-in-place concrete; reinforced with #4 [#13M] bars on 12" [300] centers both vertically and horizontally with 2" [50] clearance from the inside wall face.

OPENINGS: Pipe openings shall be the outside diameter of the pipe being supplied plus 2" [50] when fabricated or field cut. The interstitial space shall be filled with grout per CMS 601.

PCJ: Permissible construction joint

LEGEND

1 After casting is placed, fill notch with Class C concrete

2 A 1 1/2" [38] minimum exp. joint shall be provided in concrete pavement or concrete shoulders.

OHIO DEPARTMENT OF TRANSPORTATION
ROADWAY DESIGN ENGINEER
7-20-01
DATE

REVISIONS

STDS. ENGR. D. Focke
DRAWN D. Focke

All metric dimensions [in brackets [ ]] are in millimeters unless otherwise noted.

ROADWAY ENGINEERING SERVICES

STANDARD ROADWAY CONSTRUCTION DRAWING

CONCRETE BARRIER (TYPE D) INLET

NUMBER 1-2.3

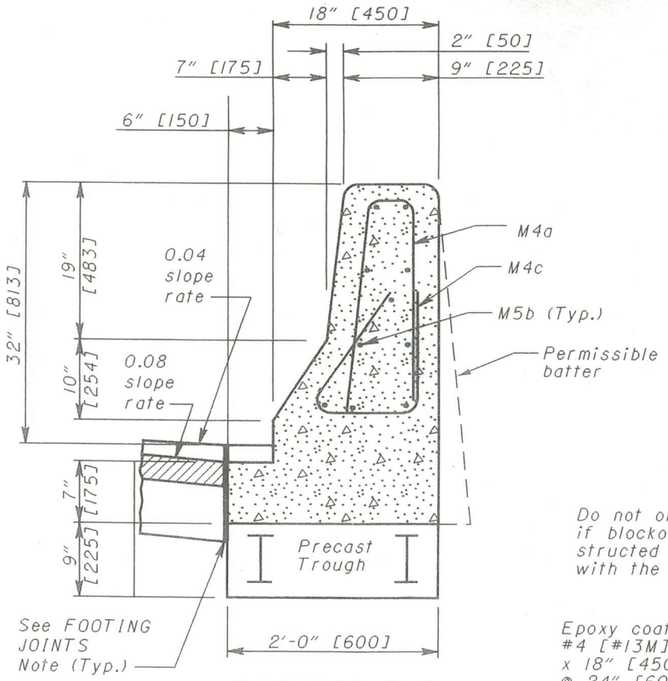

SECTION B-B
(See Sht. 1/2)

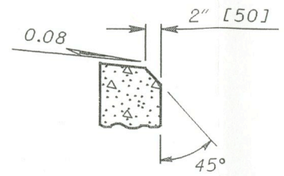

ALTERNATE SPILLWAY SHAPE

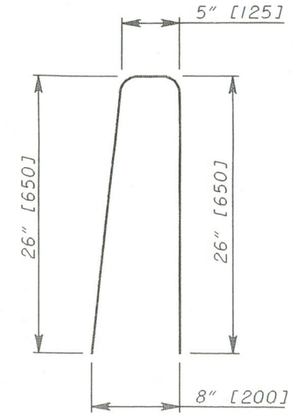

M4a

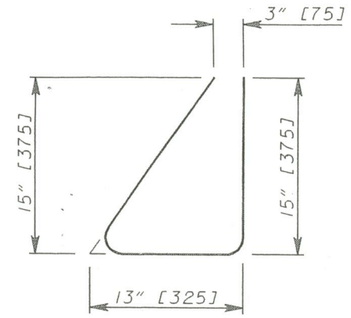

M4c

BENDING DIAGRAM

REINFORCING STEEL LIST								
INLET	M4a #4 [#13M]		M5b #5 [#16M]		M4c #4 [#13M]		S6x12.5 [S150x18.6]	
	No.	Length	No.	Length	No.	Length	No.	Length
Type D	10	4'-8" [1420]	10	19'-8" [5900]	10	3'-6" [1070]	2	11'-0" [3300]
Included for estimating purposes only. The cost of furnishing and placing all reinforcing steel shall be included in Item 604 for payment.								

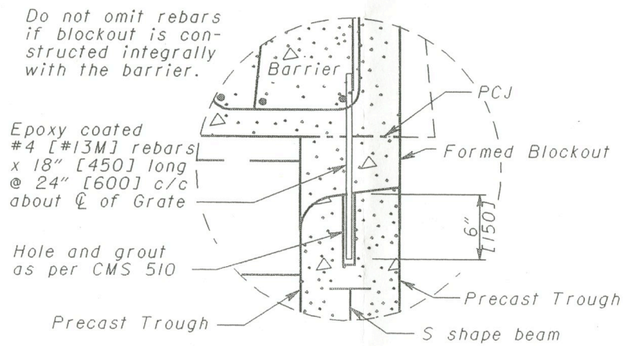

FORMED BLOCKOUT DETAIL

See Sheet 1 of 2 for NOTES and LEGEND

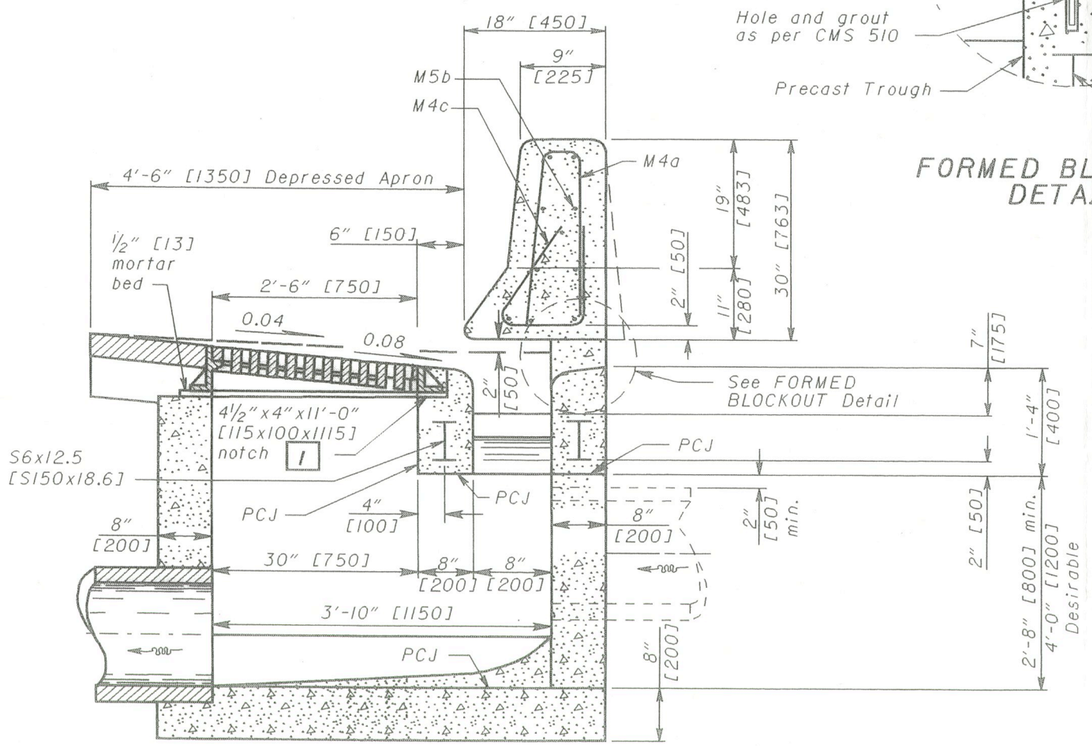

SECTION C-C
(See Sht. 1/2)

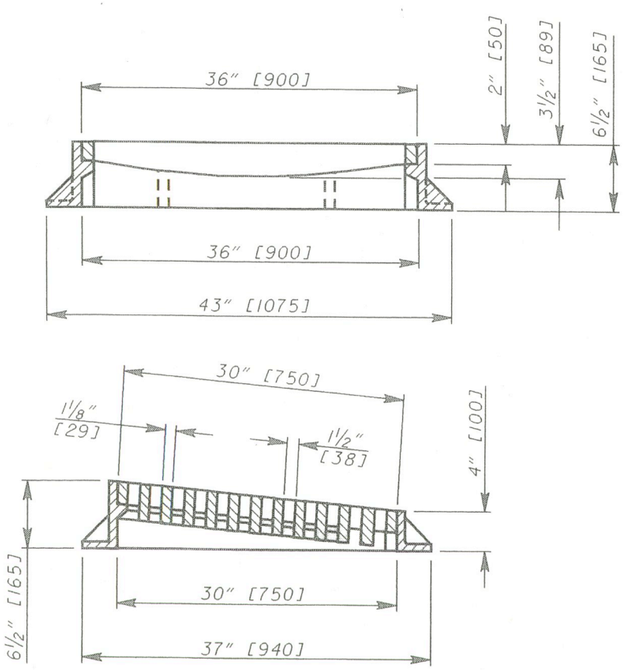

CASTING DETAILS

OHIO DEPARTMENT OF TRANSPORTATION
ROADWAY DESIGN ENGINEER
7-20-01
DATE

REVISIONS

STDS. ENGR. D. Focke
DRAWN D. Focke

All metric dimensions (in brackets [ ]) are in millimeters unless otherwise noted.

ROADWAY ENGINEERING SERVICES

STANDARD ROADWAY CONSTRUCTION DRAWING
CONCRETE BARRIER (TYPE D) INLET

NUMBER I-2.3

2/2